A/C Compressor Controls (cont'd)

Climate Control

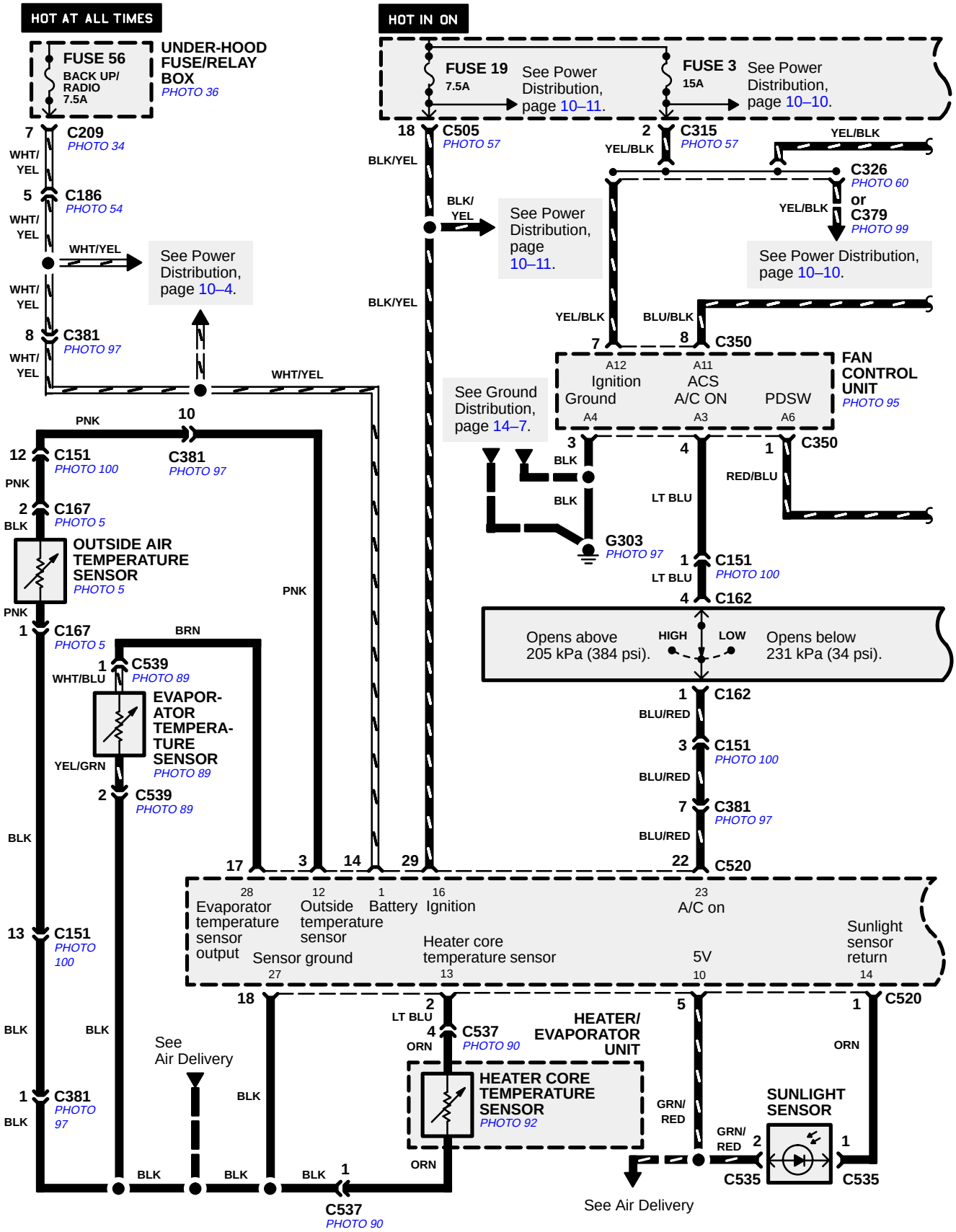

©2004 American Honda Motor Co., Inc.